SP1650354
SP1650355
SP1650356

SP1650357
SP1650358

Invacare® Action - Rea® & Küschall® Family

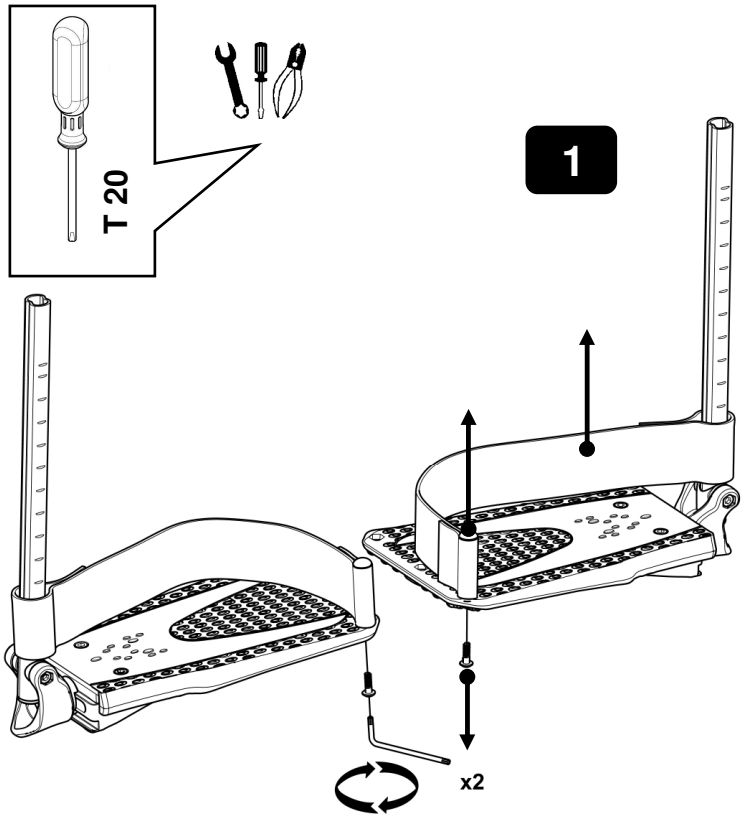

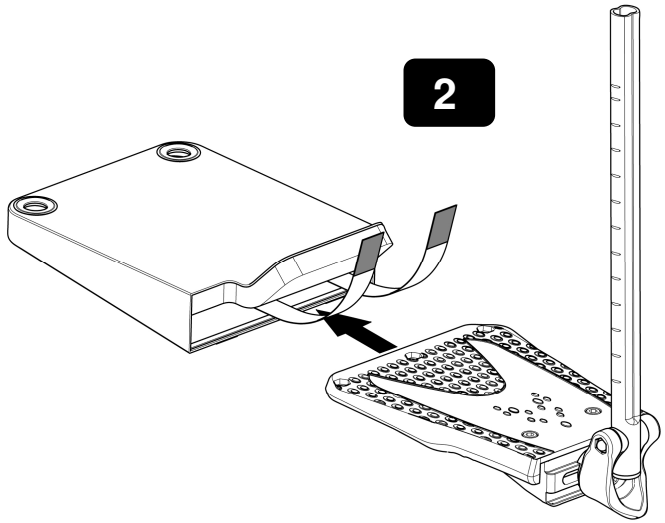

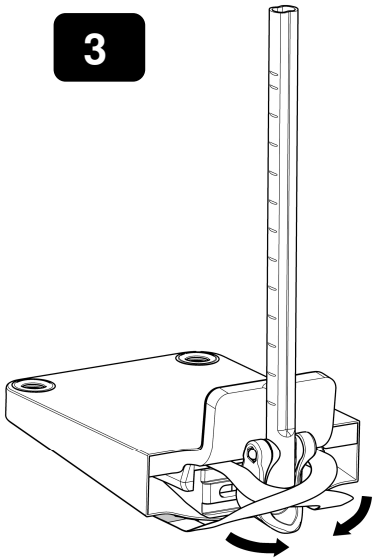

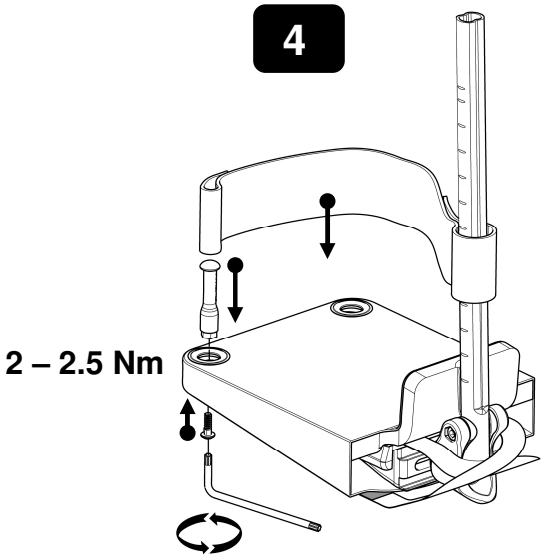

Invacare France Operations SAS
Route de St Roch
37230 Fondettes, France

Yes, you can.

1651394-A 2019-04-01 1/1